Next Vision Display
Brighten The Future

NEXT VISION DISPLAY

SPECIFICATION

CUSTOMER : _____

MODULE NO.: NT013RC001GL

Version	V0
Engineer	
Date	2021-03-18

Customer:
Approved by

NEXT VISION DISPLAY CO., LTD.

地址: 中國上海小木橋路600號
ADD: 600 XIAO MU QIAO ROAD, SHANGHAI, CHINA

WEB: www.nextvisiondisplay.com

TECHNICAL: technical@nextvisiondisplay.com
MARKETING: marketing@nextvisiondisplay.com
SALES: sales@nextvisiondisplay.com

Represented by:

first FC components
FIRST Components s.r.l.
www.first-components.com
sales@first-components.com
+39 0332 1888005

NEXT VISION DISPLAY

PRODUCT SPECIFICATIONS

- LCD MODULE PHYSICAL DATA
- EXTERNAL DIMENSIONS
- BLOCK DIAGRAM
- ABSOLUTE MAXIMUM RATINGS
- ELECTRICAL CHARACTERISTICS
- ELECTRO-OPTICAL CHARACTERISTICS
- INTERFACE PIN CONNECTIONS
- RELIABILITY
- SPECIFICATION OF QUALITY ASSURANCE
- SUGGESTIONS FOR USING LCD MODULES
- PACKING

◆ LCD MODULE PHYSICAL DATA

● General Description

Item	Standard Value	Unit
LCD Type	Transmissive TFT , 262K color	---
Number of Dots	240（RGB）X240	---
Viewing Direction	ALL	o'clock
LCM Outline Dimension	47.3(W)X47.3(H) X3.05(T)	mm
Active area	32.4(W) X32.4 (H)	mm
Operating temperature	-20℃~70℃	---
Storage temperature	-30℃~80℃	---
Driving IC	GC9A01	---
Approx. weight	TBD	g

● The backlight electrical-optical characteristics

Item	Symbol	Min	Typ	Max	Unit	Unit
Forward voltage	Vf	2.8	3.0	3.1	V	If=40mA/Ta=25℃
Uniformity	△Bp	80			%	
Luminance for BL	Lv	3500	5000		Cd/mˆ2	If=40mA/Ta=25℃

NEXT VISION DISPLAY

项次	版别	日 期	变 更 内 容
01	0/A	2021.03.16	First Edition

PIN	
1	LEDA
2	LEDK
3	GND
4	TP-VCC
5	TP-RST
6	TP-INT
7	TP-SDA
8	TP-SCL
9	GND
10	TE
11	SDA
12	WR/AO
13	SCL
14	CS
15	RESET
16	IOVCC
17	VCC
18	GND

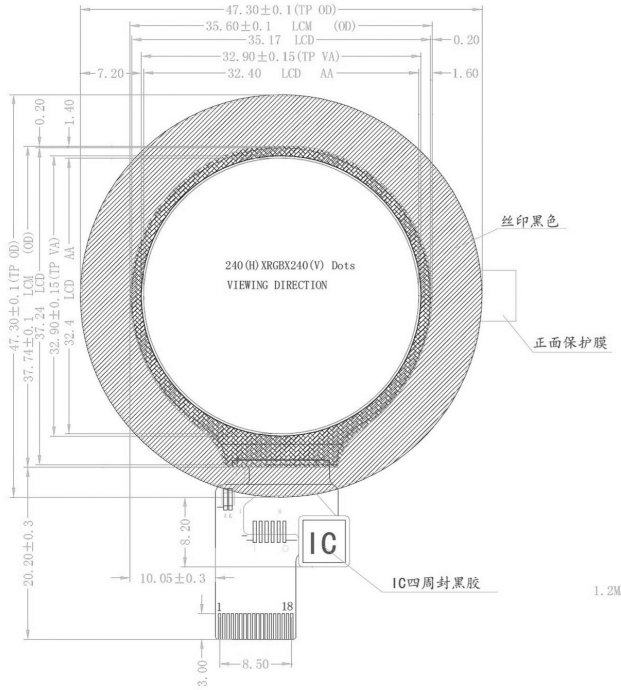

正视图



侧视图

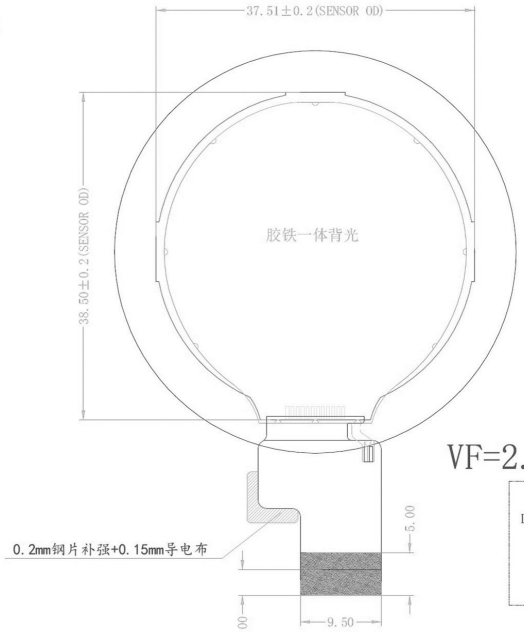

背视图

VF=2.9-3.1V IF=40MA

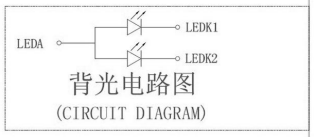

背光电路图
(CIRCUIT DIAGRAM)

PIN#	Assignment
1	VDD(3.3V)
2	RST
3	INT
4	SDA(3.3V)
5	SCL(3.3V)
6	GND

TP NOTES:
1. 结构P+F, IC: (COF) CHSC6413
2. 工作电压:2.8V-3.3V
3. 盖板: 1.0 PMMA
4. 表面硬度:≥4H
5. 透光率:≥84%
6. 工作环境:-10℃~+60℃, ≤90%RH
7. 储存环境:-20℃~+70℃, ≤90%RH
8. 未注尺寸公差按±0.2mm

LCM NOTES:
1.DISPLAY TYPE:
Main LCD:1.28" TFT,WIDE VIEW DIRECTION
2.OPERATING TEMP: -20℃--70℃
3.STORAGE TEMP: -30℃--80℃
4.MAIN LCD DRIVER: GC9A01 or Equivalent
5.BACKLIGHT: 2CHIP-WHITE LED,Parallel connection
6.产品满足ROHS要求
7.GENERAL TOLERANCE: ±0.2

GENERAL TOLERANCE	
DIM.	TOL.
0 ~ 5	±0.10
6 ~ 15	±0.12
16 ~ 50	±0.15
51 ~ 250	±0.20
HOLES	±0.10
ANGLE	±0.5°

Next Vision Display
Brighten The Future

Project		SCALE: N.T.S		TITLE:	TP DRAWING
		UNIT: mm			
	DRAWING	CHECK	APPROVE	FILE NAME:	
NAME:	Jason			FILE NO.:	
DATE:	2021.03.16			PART NO.:	

REV:	0/A
SHEET:	1/1

◆ BLOCK DIAGRAM

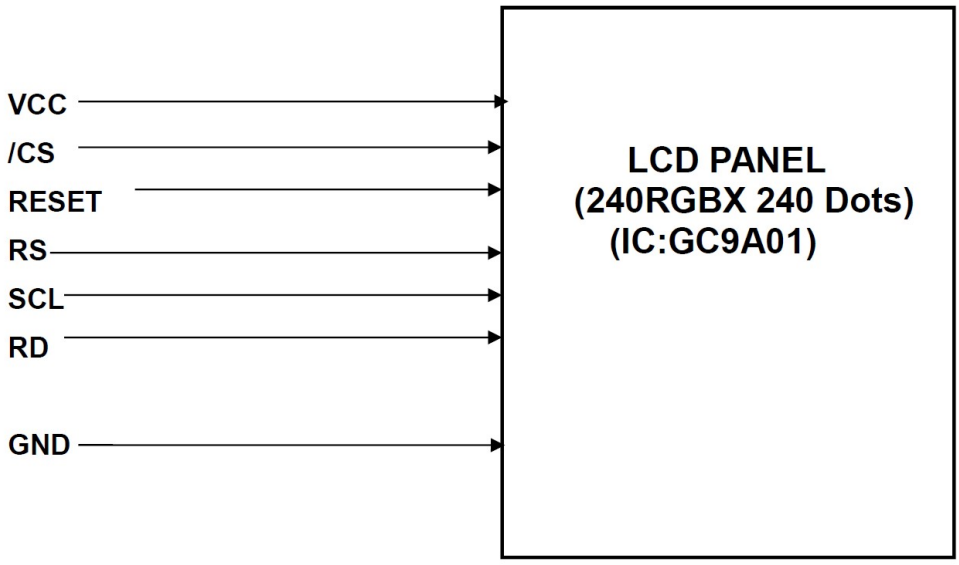

◆ ABSOLUTE MAXIMUM RATINGS

Item	Symbol	Rating	Unit
Operating temperature	Top	-20-70	℃
Storage temperature	Tst	-30-80	℃
Input voltage	Vin	-0.3-4.6	V
Supply voltage for logic	VCC	-0.3-4.6	V
Driver supply voltage	VGH - VGL	0-30.0	V

NOTE:

1. **If the module is used above these absolute maximum ratings. It may become permanently damaged. Using the module within the following electrical characteristic conditions are also exceeded, the module will malfunction and cause poor reliability.**
2. **VCC>GND must be maintained.**

◆ ELECTRICAL CHARACTERISTICS

● DC Characteristics

Item	Symbol	Condition	Min	Typ	Max	Unit
Input high voltage	V_{IH}	-	0.7IOVCC	-	IOVCC	V
Input low voltage	V_{IL}	-	0	-	0.3IOVCC	V
Voltage for logic	VCC	Ta=25℃	2.5	2.8	3.3	V
Voltage for analog	VCI	Ta=25℃	2.5	2.8	3.3	V
Voltage for I/O	IOVCC	Ta=25℃	1.65	1.8/2.8	3.3	V
Output high voltage	V_{OH}		0.8IOVCC	-	IOVCC	V
Output low voltage	V_{OL}		0		0.2IOVCC	V
Current consumption for LCD normal operation	I_{DD}	V_{DD} = 2.8	-	TBD		mA

● AC Characteristics

Refer to the SPEC of **GC9A01**

◆ ELECTRO-OPTICAL CHARACTERISTICS

Item	Symbol	Condition	Min	Typ	Max	Unit	Remark
Response time	Tr+Tf	Θ=0°; Φ=0°;	-	35	50	ms	Note4
Contrast ratio	Cr		-	800	-	-	Note3
Luminance uniformity	δ WHITE		80	-	-	%	Note7
Surface luminance	Lv			380		cd/㎡	Note6
View angle range (with polarizer)	Top	CR≥10	-	80	-	Degree	Note5
	Bottom		-	80	-		
	Left		-	80	-		
	Right		-	80	-		
CIE (X, Y)	Rx	Θ=0°	0.637	0.657	0.677	-	Note8
	Ry		0.300	0.320	0.340		
	Gx		0.267	0.287	0.307		
	Gy		0.571	0.591	0.611		
	Bx		0.120	0.140	0.160		
	By		0.060	0.080	0.100		
	Wx		0.290	0.310	0.330		
	Wy		0.307	0.327	0.347		

Note 1: Ambient temperature = 25 ± 2 ℃;
Note 2: To be measured in the dark room;
Note 3: To be measured at the center area of the panel with a view cone of 1° by BM-7, after 10 minutes operation (module).

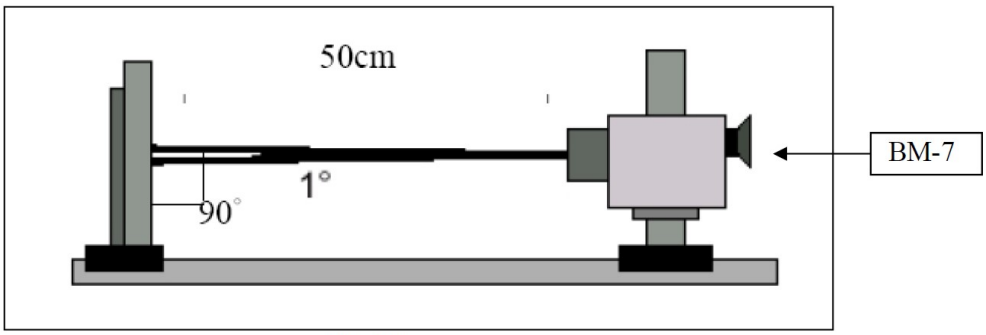

FLG1

Note 4: Define the response time:

The output signals of photo detector are measured when the input signals are charged from "black" to "white"(falling time) and from "white" to "black"(rising time), respectively. The response time is defined as the time interval between the 10% and 90% of amplitudes. Refer to figure as below.

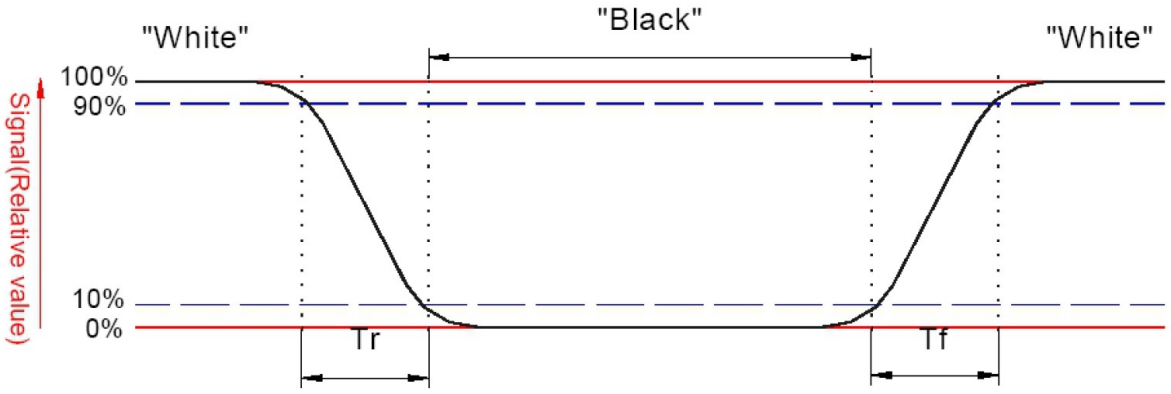

FLG2

Note 5: Contrast Ratio (CR) is defined mathematically as For more information from FLG3

Contrast Ratio= Average surface luminance with all white pixel (P1,P2,P3,P4,P5,P6,P7,P8,P9)
Average surface luminance with all black pixel (P1,P2,P3,P4,P5,P6,P7,P8,P9)

Note 6: Surface luminance is the center point across the LCD surface 500mm from the surface with all pixel displaying white, For more information see the FLG3

Lv= Average Surface luminance with all white pixel(P1,P2,P3,P4,P5,P6,P7,P8,P9)

Note 7: The uniformity in surface luminance, δ white is determined by measuring luminance at each test position 1to 5, and then dividing the maximum luminance of 5 points luminance by minimum luminance of 5 points luminance. For more information see FLG3.

δ WHITE= Minimum surface luminance with all white pixel(P1,P2,P3,P4,P5,P6,P7,P8,P9)
Maximum surface luminance with all white pixel(P1,P2,P3,P4,P5,P6,P7,P8,P9)

Note 8: CIE(X, Y), the X, Y value is determined by measuring luminance at each test position 1 to 5, and then make average value. For more information see FLG3.

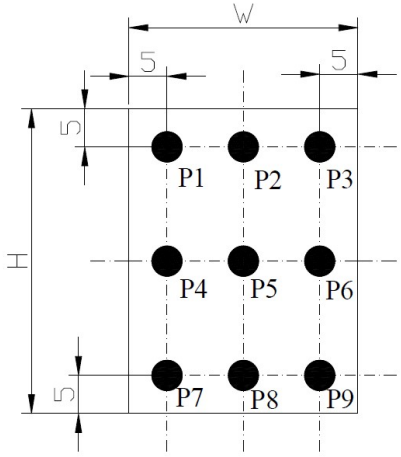

H,V: Active area
Light source spot size: Φ=2.0mm
Measure device: BM-7

FLG3

Note 9: Viewing angle is the angle at which the contrast ratio is greater than 2, TFT module the contrast ratio is greater than 10. The angles are determined for the horizontal or x axis and the

vertical or y axis with respect to the z axis which is normal to the LCD surface. For more information see the FLG 4.

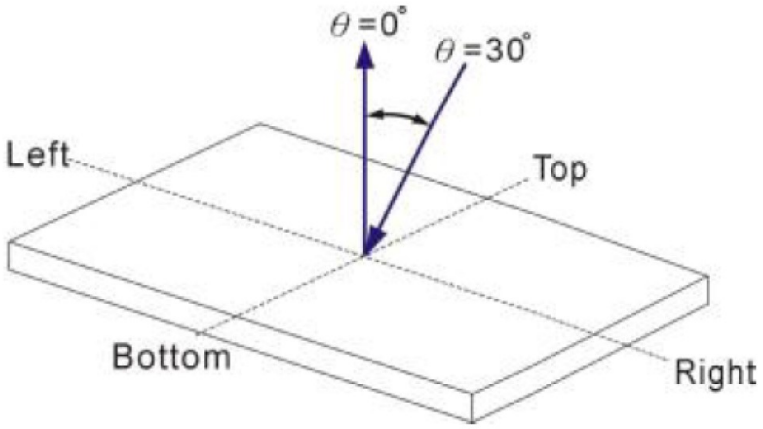

FLG4

◆ INTERFACE PIN CONNECTIONS

NO.	Symbol	Level	Function
1	LEDA		LED, anode.
2	LEDK		LED, cathode.
3	GND		Ground
4	TP-VCC		Power setting
5	TP-RESET		TP RESET PIN
6	TP-INT		TP INT
7	TP-SDA		TP SDA
8	TP-SCL		TP SCL
9	GND		Ground
10	TE		TE
11	SDA		SPI interface input/output pin.
12	WR/A0		command selection pin in 4-line serial interface
13	SCL		This pin is used to be serial interface clock
14	CS		-Chip selection pin
15	RESET		Reset signal.
16	IOVCC	1.8V	Power supply for digital interface
17	VDD	2.8V(typ)	Power supply.
18	GND		Ground

◆ RELIABILITY

NO	Test Item	Description	Test Condition
1	High temperature storage	Endurance test applying the high storage temperature for a long time	80℃,200 H
2	Low temperature storage	Endurance test applying the low storage temperature for a long time	-30℃,200H
3	High temperature operation	Endurance test applying the electric stress under high temperature for a long time	70℃,120H
4	Low temperature operation	Endurance test applying the electric stress under low temperature for a long time	-20℃,120H
5	High temperature /humidity storage	Endurance test applying the high temperature and high humidity storage for a long time	50℃，90% R.H 200H
6	High temperature /humidity operation	Endurance test applying electric stress under high temperature and high humidity for a long time	40℃ 90% R.H 96H
7	Temperature Cycle	Endurance test applying the low and high temperature cycle -20℃ → 25℃ → 70℃ →25℃ 30min 5min 30min 5min one cycle	-20℃/70℃ 10 cycles
8	Vibration test	Endurance test applying the vibration during transportation and using	Frequency:10Hz~55Hz~10Hz Amplitude:1.5mm X,Y,Z direction for total 3hours (parking condition)
9	Fall test	Endurance test dropping the LCM from a high place	600mm height
10	Static electricity test	Endurance test applying static electric stress to terminal	Air discharge 10 times R=330Ω, C=150pF. ±8KV **Remark**: if malfunction can be recovered to normal state after reset or power on, it wil be judged to be a good part

◆ SPECIFICATION OF QUALITY ASSURANCE

- **Summary**

The Customer should check and accept the products of Next Vision Display within one month after receivement. This standard for Quality Assurance should affirm the quality of LCD products to supply to purchaser by Next Vision Display.

- **Standard for quality test**

1、 Inspection
Before delivering, the supplier should take the following tests, and affirm the quality of product.

2、 Electro-Optical Characteristics
According to the individual specification to test the product.

3、 Test of Appearance Characteristics:
According to the individual specification to test the product.

4、 Test of Reliability Characteristics
According to the definition of reliability on specification for test product.

5、 Delivery Test
Before delivering, the supplier should take the delivery test

6、 Sampling Method: GB/T2828.1-2003, Level II

7、 The defects classify of AQL as following

Major defect: AQL=0.65

Minor defect: AQL=1.5

- **Nonconforming Analysis & Deal With Manners**

✧ Nonconforming Analysis

1、 Purchaser should supply the detail data of nonconforming sample and the non-suitable state.

2、 After accepting the detail data from purchaser ,the analysis of nonconforming should be finished in two weeks.

3、 If supplier can not finish analysis on time ,must announce purchaser before two weeks.

✧ Disposition of nonconforming

1、 If find any supplier defect during assembly line, supplier must change the good product for every defect after recognition.

2、Both supplier and customer should analysis the reason and discuss the disposition of nonconforming when the reason of nonconforming is not sure.

- **Agreement items.**

Both sides should discuss together when the following problems happen:

1、 There is any problem of standard of quality assurance ,and both sides think that must be modifier.

2、There is any argument item which does not record in the quality assurance.

3、Any other special problem.

- **Standard of the Product Appearance Test**

■ Manner of appearance test

1、 The test must be under 20W*2 or 40W fluorescent light ,and the distance of view must be at 30±5 cm.

2、 When test the model of Transmissive product must add the reflective plate.
3、 The test direction is base on about around 30 degree(within θ range)of vertical line.

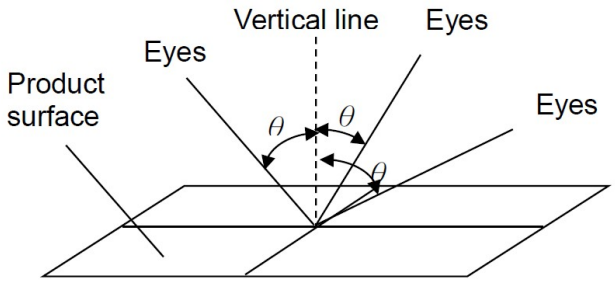

4、Definition of Area:

A Area: Active area
B Area: Viewing area
C Area: Out of viewing area
D Area: Seal area

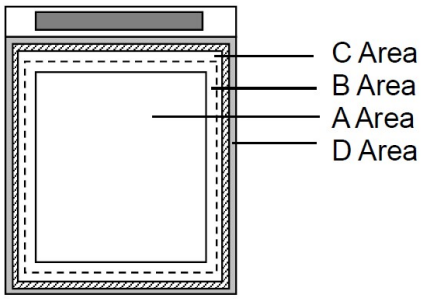

■ Basic principle:

1、 It will accord to the AQL when the standard can not be described.
2、 The sample of the lowest acceptable quality level must be discussed by both supplier and customer when any dispute happened.
3、 Must add new item on time when it is necessary.

● **Inspection specification**

<table>
<tr><th>NO</th><th>Item</th><th>Criterion</th><th>AQL</th></tr>
<tr><td>01</td><td>Electrical Testing</td><td>1.1 Missing vertical, horizontal segment, segment contrast defect.
1.2 Missing character, dot or icon.
1.3 Display malfunction.
1.4 No function or no display.
1.5 Current consumption exceeds product specifications.
1.6 LCD viewing angle defect.
1.7 Contrast defect</td><td>0.65</td></tr>
<tr><td>02</td><td>LCD black spots, white spots, color spots, contamination, scratches (display/non-display)</td><td>2.1 Round type: As following drawing
φ=(x+y)/2
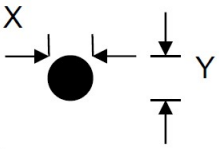

<table>
<tr><th rowspan="2">Size</th><th colspan="2">Acceptable QTY</th><th rowspan="2">Remark</th></tr>
<tr><th>A.A</th><th>V.A</th></tr>
<tr><td>φ≦0.20</td><td>Ignore</td><td>Ignore</td><td rowspan="5">No more than two spots within 5mm</td></tr>
<tr><td>0.20<φ≦0.25</td><td>2</td><td>3</td></tr>
<tr><td>0.25 ≦φ≦0.30</td><td>1</td><td>2</td></tr>
<tr><td>0.30<φ</td><td>0</td><td>0</td></tr>
<tr><td>Total</td><td>3</td><td>5</td></tr>
</table>
2.2 Line Type: (As following drawing)
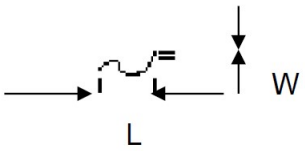

<table>
<tr><th>Length</th><th>Width</th><th colspan="2">Acceptable QTY</th><th>Remark</th></tr>
<tr><td></td><td></td><td>A.A</td><td>V.A</td><td></td></tr>
<tr><td>---</td><td>W≦0.03</td><td>Ignore</td><td>Ignore</td><td></td></tr>
<tr><td>L≦2.5</td><td>0.03< W≦0.05</td><td rowspan="2">2</td><td rowspan="2">3</td><td rowspan="2">No more than two lines within 5mm</td></tr>
<tr><td>L≦1.5</td><td>0.05< W≦0.08</td></tr>
<tr><td>---</td><td>0.08< W</td><td>0</td><td>0</td><td></td></tr>
</table></td><td>1.5</td></tr>
</table>

<table>
<tr>
<td>03</td>
<td>Polarizer bubbles</td>
<td>If bubbles are visible, judge using black spot specifications, not easy to find, must check in specify direction.
<table>
<tr><td rowspan="2">Size</td><td colspan="2">Acceptable QTY</td></tr>
<tr><td>A.A</td><td>V.A</td></tr>
<tr><td>φ≦0.30</td><td>Ignore</td><td>Ignore</td></tr>
<tr><td>0.30<φ≦0.60</td><td>2</td><td>3</td></tr>
<tr><td></td><td>0</td><td>0</td></tr>
</table>
</td>
<td>1.5</td>
</tr>
</table>

04	Chipped glass	Symbols: a: Chip length b: Chip width c: Chip thickness t: Glass thickness 4.1 ITO electrode a<=t b<=0.5mm c<=3.0mm 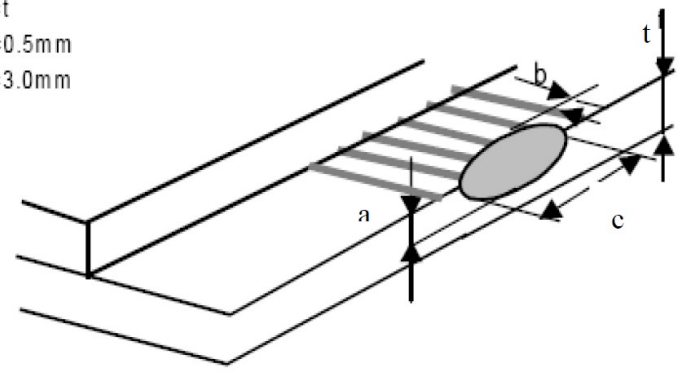 4.2 General ,corner portion a<= t b<=1.0mm c<=5.0mm 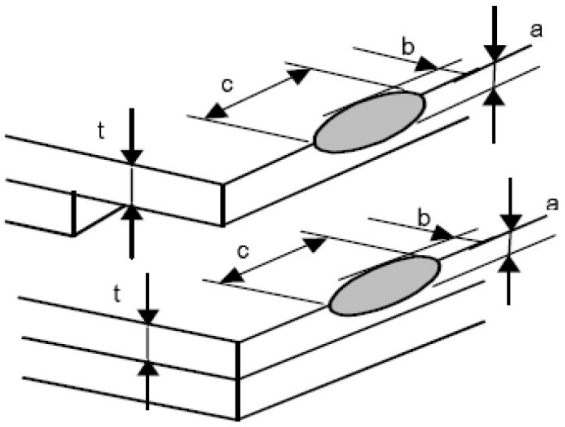 *Effective width of seal area shall be more than 0.3mm. 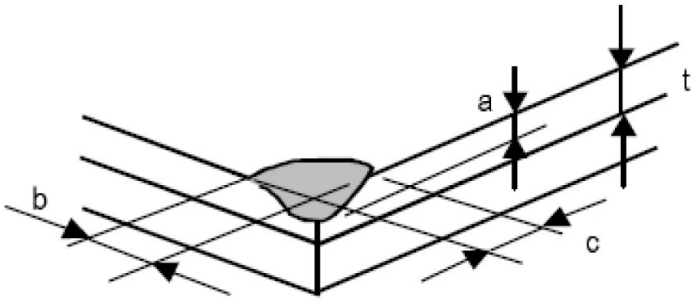 	1.5

05	Cracked glass	The LCD with extensive crack is not acceptable.	0.65
06	Backlight elements	6.1 Illumination source flickers when lit. 6.2 Spots or scratches that appear when lit must be judged using LCD spot, lines and contamination standards. 6.3 Backlight doesn't light or color is wrong	0.65 1.5 0.65
07	Soldering	7.1 No unmelted solder paste may be present on the PCB. 7.2 No cold solder joints, missing solder connections, oxidation or icicle. 7.3 No residue or solder balls on PCB. 7.4 No short circuits in components on PCB.	1.5 1.5 1.5 0.65
08	General appearance	8.1 No oxidation, contamination, curves or, bends on interface pin (OLB) of TCP. 8.2 No cracks on interface pin(OLB) of TCP 8.3 NO contamination, solder residue or solder balls on product. 8.4 The IC on the TCP may not be damaged, circuits. 8.5 The residual rosin or tin oil of soldering (component or chip component) is not burned into brown or black color. 8.6 Sealant on top of the ITO circuit has not hardened 8.7 Pin type must match type in specification sheet. 8.8 LCD pin loose or missing pins. 8.9 Product packaging must the same as specified on packaging specification sheet. 8.10 Product dimension and structure must conform to product specification sheet.	1.5 0.65 1.5 0.65 1.5 1.5 0.65 0.65 0.65 0.65

◆ SUGGESTIONS FOR USING LCD MODULES

- **Handling of LCM**

(1) The LCD screen is made of glass. Don't give excessive external shock, or drop from a high place.

(2) If the LCD screen is damaged and the liquid crystal leaks out, do not lick and swallow. When the liquid is attach to your hand, skin, cloth etc, wash it off by using soap and water thoroughly and immediately.

(3) Don't apply excessive force on the surface of the LCM.

(4) If the surface is contaminated ,clean it with soft cloth. If the LCM is severely contaminated , use Isopropyl alcohol/Ethyl alcohol to clean. Other solvents may damage the polarizer . The following solvents is especially prohibited: water , ketone Aromatic solvents etc.

(5) Exercise care to minimize corrosion of the electrode. Corrosion of the electrodes is accelerated by water droplets, moisture condensation or a current flow in a high-humidity environment.

(6) Install the LCD Module by using the mounting holes. When mounting the LCD module make sure it is free of twisting, warping and distortion. In particular, do not forcibly pull or bend the I/O cable or the backlight cable.

(7) Don’t disassemble the LCM.

(8) To prevent destruction of the elements by static electricity, be careful to maintain an optimum work environment.

- Be sure to ground the body when handling the LCD modules.
- Tools required for assembling, such as soldering irons, must be properly grounded.
- To reduce the amount of static electricity generated, do not conduct assembling and other work under dry conditions.
- The LCD module is coated with a film to protect the display surface. Exercise care when peeling off this protective film since static electricity may be generated.

(9) Do not alter, modify or change the the shape of the tab on the metal frame.

(10) Do not make extra holes on the printed circuit board, modify its shape or change the positions of components to be attached.

(11) Do not damage or modify the pattern writing on the printed circuit board.

(12) Absolutely do not modify the zebra rubber strip (conductive rubber) or heat seal connector

(13) Except for soldering the interface, do not make any alterations or modifications with a soldering iron.

(14) Do not drop, bend or twist LCM.

- **Storage**

(1) Store in an ambient temperature of 5 to 45 C, and in a relative humidity of 40% to 60%. Don't expose to sunlight or fluorescent light.

(2) Storage in a clean environment, free from dust, active gas, and solvent.

(3) Store in antistatic container.

- **Limited Warranty**

Unless agreed between Next Vision and customer, Next Vision will replace or repair any of it's LCD modules are found to be functionally defective when inspected in accordance with Next Vision LCD acceptance standards (copies available upon request) for a period of one year from the Date of shipment. Cosmetic/visual defects must be returned to Next Vision within 90days of shipment. Confirmation of such date shall be based on freight documents.The warranty liability of Next Vision limited to repair and/or replacement on the terms above. Next Vision will not be responsible for any subsequent or consequential events.

◆ PACKING

- **Packing Materials**

NO.	ITEM	Dimension(LXWXH) (mm)	Quantity
1	Tray	TBD	20
2	Carton	TBD	200

- **Packing Method**

(1)

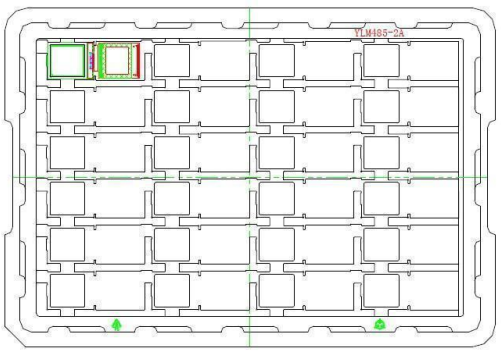

(2)

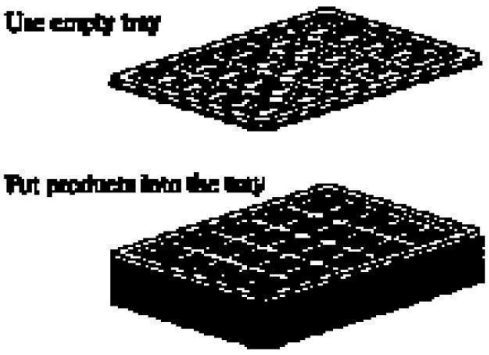

(3)

(4)

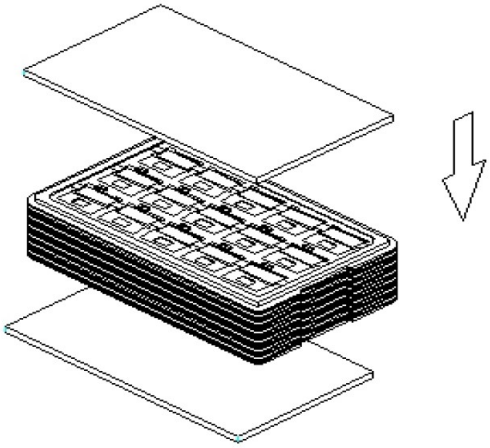

(5)

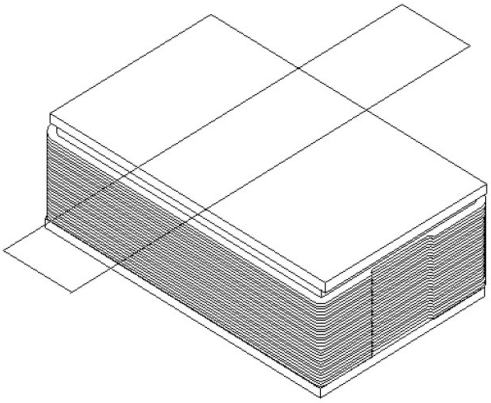

(6)

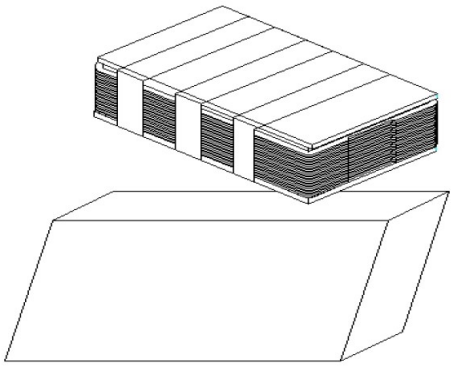

(7)

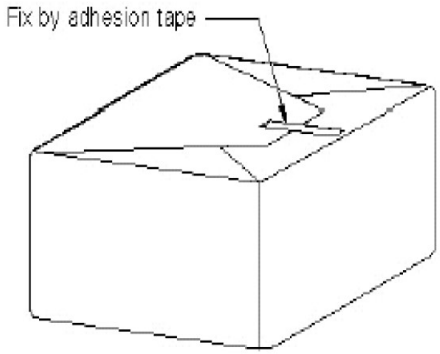

(8)

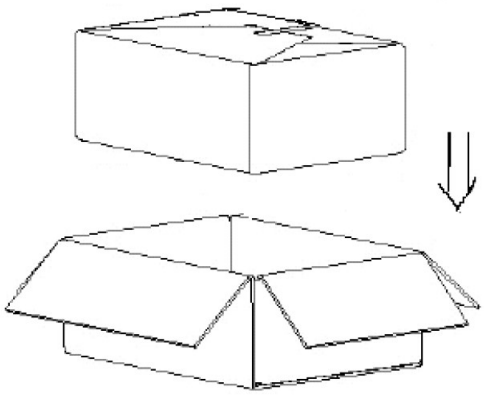

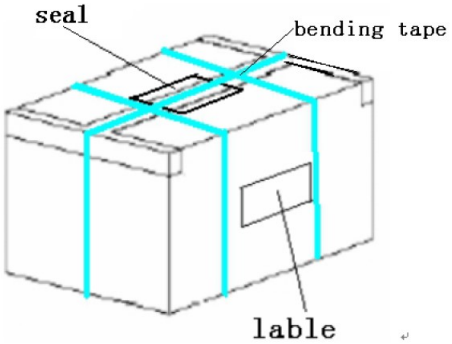

(1). Put module into tray cavity :
(2). Tray stacking
(3). Put 1 cardboard under the tray stack and 1 cardboard above:
(4). Fix the cardboard to the tray stack with adhesive tape:
(5). Put the tray stack and 4 pcs desiccant into the LDPE bag
(6). Fix the LDPE bag with adhesive tape:
(7). Put LDPE bag with tray stack into carton.:
(8). Carton sealing with adhesive tape.