Next Vision Display
Brighten The Future

NEXT VISION DISPLAY

SPECIFICATION

CUSTOMER : _____

MODULE NO.: NT043-C001ML

Version	01
Engineer	
Date	2019.3.3

Next Vision Display
Brighten The Future

Customer:
Approved by

NEXT VISION DISPLAY CO., LTD.

地址: 中國上海小木橋路600號
ADD: 600 XIAO MU QIAO ROAD, SHANGHAI, CHINA

WEB: www.nextvisiondisplay.com

TECHNICAL: technical@nextvisiondisplay.com
MARKETING: marketing@nextvisiondisplay.com
SALES: sales@nextvisiondisplay.com

Represented by:

first FC components
FIRST Components s.r.l.
www.first-components.com
sales@first-components.com
+39 0332 1888005

1. General Description

- The NT043-C001ML model is a Color TFT LCD supplied by Next Vision Display.
- This main Module has a 4.3 inch diagonally measured active display area with 800(RGB)X480 resolution. Each pixel is divided into Red, Green and Blue sub-pixels and dots, which are arranged in vertical stripes.
- The NT043-C001ML has been designed to apply the HDMI interface method that enables low power, high speed, and high contrast.

2. Mechanical Specification

ITEM	Standard Value	Unit
Display Mode	Normally Black, Transmissive LCD	
Module Dimension	105.80(W)*85.09(H)*6.73(T)	mm
Resolution	800(RGB)X 480	Pixels
Active Display Area	95.04(W)×53.86(H)	mm
Pixel pitch (W×H)	0.1188×0.1122	m
Module Structure	LCD Display+ CTP Touch+PCB	
Viewing Direction	All	--
LED Backlight Color	White	--
Interface	HDMI	--
Color Numbers	16.7M	
Power supply	USB(5.0V)	
Support system	Win/7/Win8/Win10(plug and play)	
	Android,Linux (configured in requests)	
Power Consumption	500(Max)	mA

Next Vision Display
Brighten The Future

3. Absolute Max Ratings & Electrical Specification

- **Absolute Max Rating**

Item	Min.	Typ	Max	Unit	Remark
Operating temperature	-20	--	70	° C	
Storage temperature	-30	--	80	° C	
Humidity	--	--	90%	RH	@60° C

Note:

*1) Liquid Crystal driving voltage.

Due to the characteristics of LC Material, this voltage vary with environmental temperature.

*2) Temp.>60℃, Absolute humidity shall be less than 90%RH at 60℃

*3) Temp.≤60℃, 90%RH MAX.

*4) The recommended operating conditions refer to a range in which operation of this product is guaranteed. Should this range is exceeded, the operation cannot be guaranteed even if the values may be without the absolute maximum ratings.

Accordingly, please make sure that the module is used within this range. And these current values are measured under the condition that all devices are stopped, each component is stable and logic signal is input.

■ TFT Electrical Specification

Item	Min.	Typ	Max	Unit	Remark
PCB operating voltage	4.8	5.0	-	V	USB input
LCD I/O voltage(VDD)	3.0	3.3	3.6	V	
Input signal ” H”	0.7*VDD	--	VDD	V	
Input signal ” L”	VSS	--	0.3*VDD	V	
Output signal ” H”	VDD-0.4		VDD	V	
Output signal ” L”	VSS		VSS+0.4	V	

Next Vision Display
Brighten The Future

■ **CTP Characteristics**

Item of CTP characteristics	Specification	Unit	Remark
Panel Type	Glass Cover + Glass Sensor	-	-
Resolution	800 × 480	pixel	-
Surface Hardness	≥6H	-	-
Transparency	＞82%	-	-
Driver IC	-	-	-
Interface Type	USB	-	-
Support Points	5（Max）	-	-
Sampling Rate	20~100	Hz	-
Supply voltage	3.3	V	-

Next Vision Display
Brighten The Future

4. Optical Specification

Item	Symbol	**Condition**	Min.	Typ.	Max.	Unit	Note
Brightness	Bp	θ=0°	-	350	-	cd/m^2	
Uniformity	ΔBp	Φ=0°	-	80	-	%	
Viewing Angle	θ1 (Φ=90° or270°)	12 o'clock	70	80	-	Deg	Cr≥10
		6 o'clock	70	80	-		
	θ2 (Φ=0° or 180°)	9 o'clock	70	80	-		
		3 o'clock	70	80	-		
CIE	Wx	θ=0° Φ=0°	0.26	0.30	0.36		
	Wy		0.28	0.33	0.38		
Contrast Ratio	Cr		640	800		-	
Response Time	t_{on}		-	30	40	ms	
	t_{off}		-			ms	

Next Vision Display
Brighten The Future

Note.1 These items are measured by C light.
Note.2 Definition of Viewing Angle(θ,ψ),refer to Fig.1 as below :

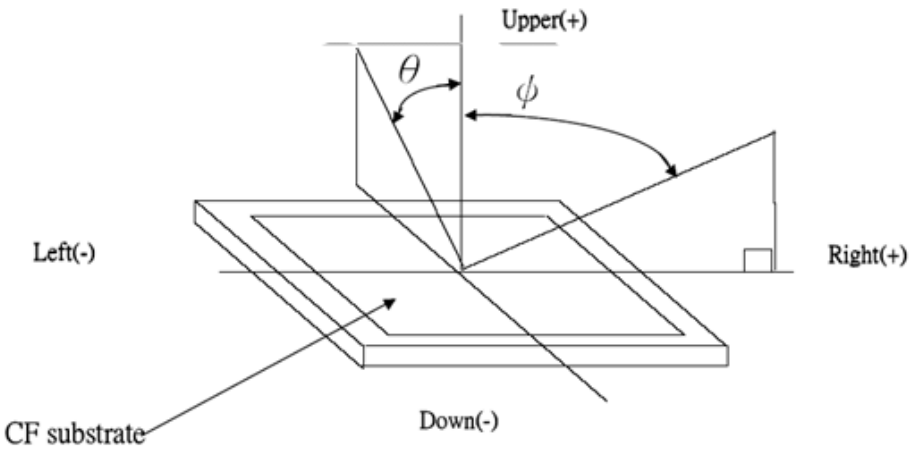

Fig.1 Definition of Viewing Angle

Note.3 Using LC+ EWV Polarizer+Corresponding Backlight, reference only, Measure device：BM-5A (TOPCON)，viewing cone= 1 °，I_L=20mA。

Electro-optical characteristics test method:

Next Vision Display
Brighten The Future

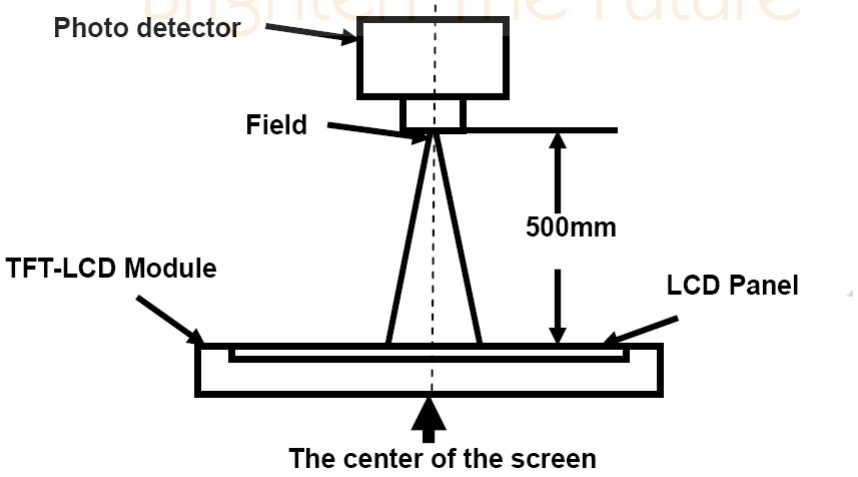

Definition of contrast ratio

$$\text{Contrast ratio (CR)} = \frac{\text{Luminance measured when LCD is on the "White" state}}{\text{Luminance measured when LCD is on the "Black" state}}$$

“White state “:The state is that the LCD should driven by Vwhite.

“Black state”: The state is that the LCD should driven by Vblack.

Vwhite: To be determined

Vblack: To be determined.

Definition of Response Time:

The response time is defined as the LCD optical switching time interval between “White” state and

“Black” state. Rise time (TON) is the time between photo detector output intensity changed from

90% to 10%. And fall time (TOFF) is the time between photo detector output intensity changed from10% to 90%.

Next Vision Display
Brighten The Future

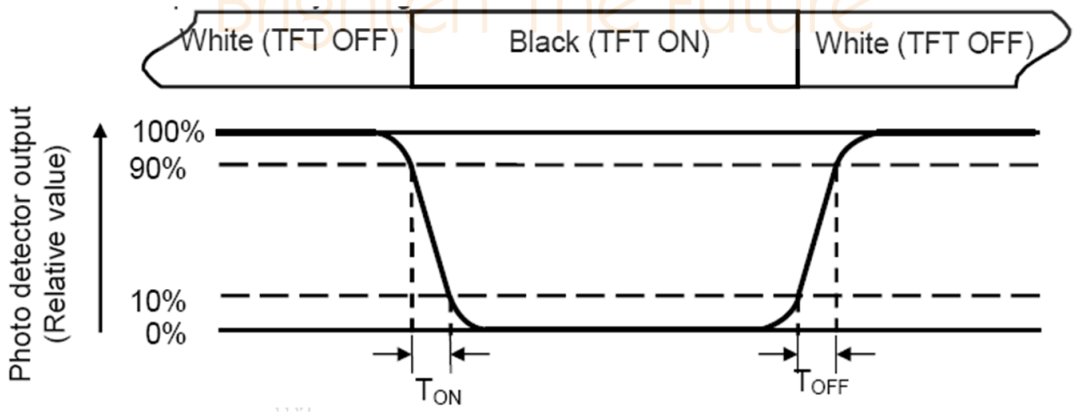

Definition of color chromaticity (CIE1931)

Color coordinates measured at center point of LCD

Definition of Luminance Uniformity

Active area is divided into 9 measuring areas (Refer Fig. 2). Every measuring point is placed at the center of each measuring area.

Luminance Uniformity(U) = Lmin/ Lmax

L-------Active area length W----- Active area width

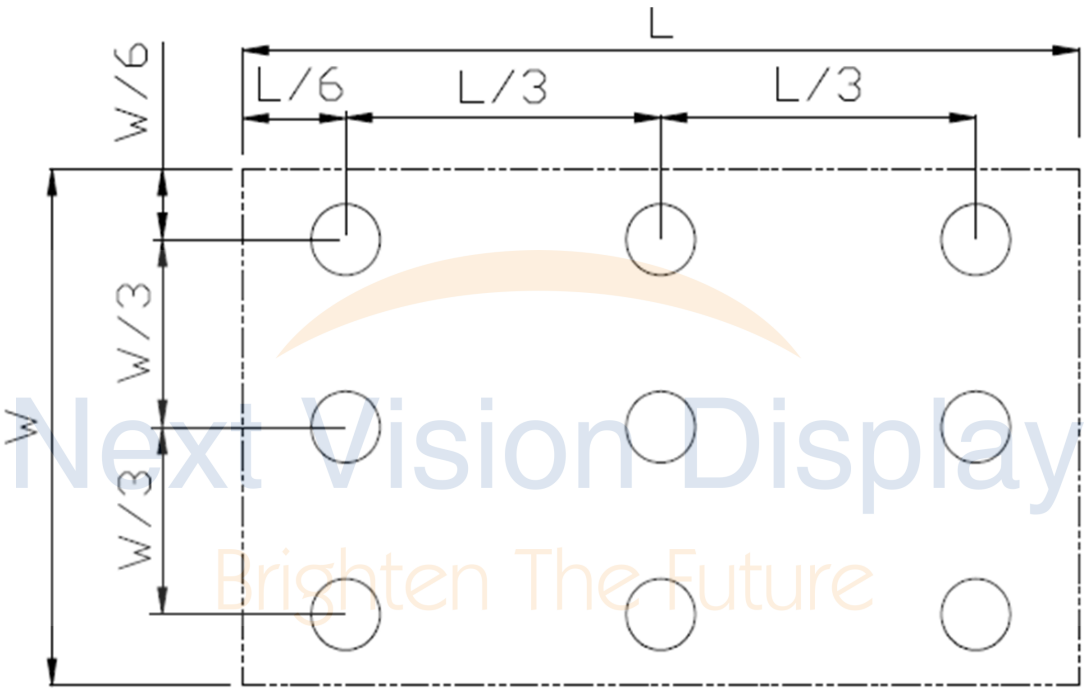

Next Vision Display
Brighten The Future

Lmax: The measured maximum luminance of all measurement position.

Lmin: The measured minimum luminance of all measurement position.

5. Mechanical Diagram

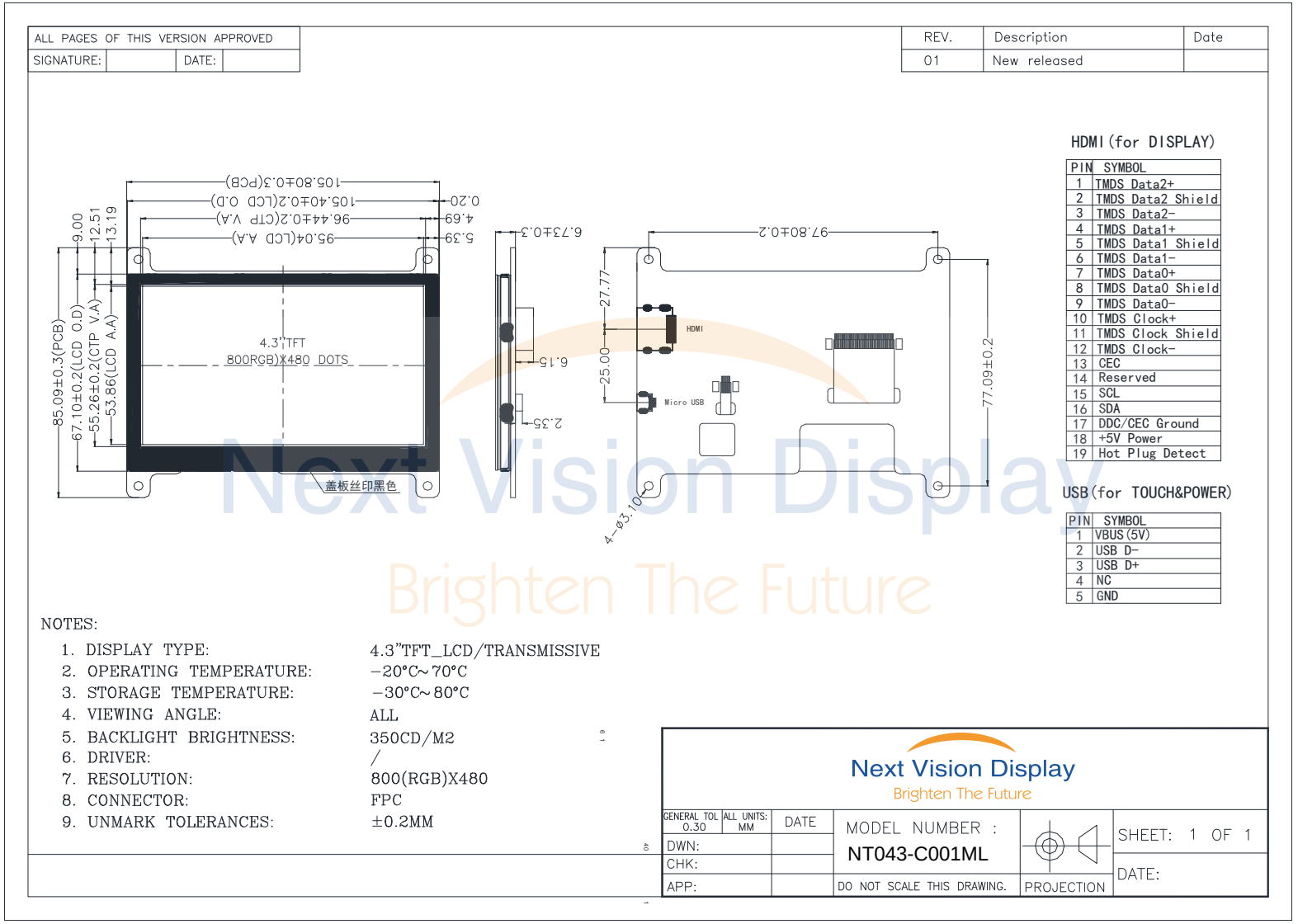

Next Vision Display
Brighten The Future

6. Interface Pin Connections

HDMI interface：

Pin No.	Symbol	Description
1	TMDS Data2+	Positive side of channel 2 TMDS low-voltage signal differential input pair
2	TMDS Data2 Shield	Ground
3	TMDS Data2-	Negative side of channel 2 TMDS low-voltage signal differential input pair
4	TMDS Data1+	Positive side of channel 1 TMDS low-voltage signal differential input pair
5	TMDS Data1 Shield	Ground
6	TMDS Data1-	Negative side of channel 1 TMDS low-voltage signal differential input pair
7	TMDS Data0+	Positive side of channel 0 TMDS low-voltage signal differential input pair
8	TMDS Data0 Shield	Ground
9	TMDS Data0-	Negative side of channel 0 TMDS low-voltage signal differential input pair
10	TMDS Clock+	Positive side of reference clock. TMDS low-voltage signal differential input pair
11	TMDS Clock Shield	Ground
12	TMDS Clock-	Negative side of reference clock. TMDS low-voltage signal differential input pair
13	CEC	No Connection
14	Reserved(N.C.)	No Connection
15	SCL	DDC SCL
16	SDA	DDC SDA
17	DDC/CEC Ground	Ground
18	+5V Power	+5V Power
19	Hot Plug Detect	Hot Plug Detect

Next Vision Display
Brighten the Future