Next Vision Display
Brighten The Future

NEXT VISION DISPLAY

SPECIFICATION

CUSTOMER : _____

MODULE NO.: NG12864GN002WS

Version	J
Engineer	
Date	2020/12/15

Next Vision Display
Brighten The Future

Customer:
Approved by

NEXT VISION DISPLAY CO., LTD.

地址: 中國上海小木橋路600號
ADD: 600 XIAO MU QIAO ROAD, SHANGHAI, CHINA

WEB: www.nextvisiondisplay.com

TECHNICAL: technical@nextvisiondisplay.com
MARKETING: marketing@nextvisiondisplay.com
SALES: sales@nextvisiondisplay.com

Represented by:

first FC components
FIRST Components s.r.l.
www.first-components.com
sales@first-components.com
+39 0332 1888005

General Specification

Item	Dimension	Unit
Number of Dots	128 x 64 dots	—
Module dimension	55.2x 39.8 x 6.5(MAX)	mm
View area	45.2 x 27.0	mm
Active area	40.92 x 24.28	mm
Dot size	0.28 x 0.34	mm
Dot pitch	0.32 x 0.38	mm
LCD type	STN, Blue ,Transmissive Negative (In LCD production, It will occur slightly color difference. We can only guarantee the same color in the same batch.)	
Duty	1/64 , 1/9 Bias	
View direction	6 o'clock	
Backlight Type	LED White	
IC	ST7565P	
Interface	6800/8080/4-Line SPI	

Next Vision Display
Brighten The Future

Absolute Maximum Ratings

Item	Symbol	Min	Typ	Max	Unit
Operating Temperature	T_{OP}	-20	—	+70	℃
Storage Temperature	T_{ST}	-30	—	+80	℃
Power Supply Voltage	VDD	-0.3	—	3.6	V
Power supply voltage (VDD standard)	V0, VOUT	-0.3	—	14.5	V
Power supply voltage (VDD standard)	V1, V2, V3, V4	-0.3	—	V0+0.3	V

Next Vision Display
Brighten The Future

Electrical Characteristics

Item	Symbol	Condition	Min	Typ	Max	Unit
Supply Voltage For Logic	V_{DD}-V_{SS}	—	2.7	3.0	3.3	V
Supply Voltage For LCM	VOP	Ta=-20℃	—	—	—	V
		Ta=25℃	9.4	9.6	9.8	V
		Ta=70℃	—	—	—	V
Input High Volt.	V_{IH}	—	0.8 V_{DD}	—	V_{DD}	V
Input Low Volt.	V_{IL}	—	Vss	—	0.2 V_{DD}	V
Output High Volt.	V_{OH}	—	0.8 V_{DD}	—	V_{DD}	V
Output Low Volt.	V_{OL}	—	Vss	—	0.2V_{DD}	V
Supply Current(No include LED Backlight)	I_{DD}	V_{DD}=3.0V	—	0.49	1.0	mA

NOTE 1: Please kindly consider to design the Vop to be adjustable while programing the software to match LCD contrast tolerance

Next Vision Display
Brighten The Future

Optical Characteristics

Item	Symbol	Condition	Min	Typ	Max	Unit
View Angle	θ	CR≧2	0	—	20	ϕ = 180°
	θ	CR≧2	0	—	40	ϕ = 0°
	θ	CR≧2	0	—	30	ϕ = 90°
	θ	CR≧2	0	—	30	ϕ = 270°
Contrast Ratio	CR	—	—	3	—	—
Response Time	T rise	—	—	200	300	ms
	T fall	—	—	250	350	ms

Definition of Operation Voltage (Vop)

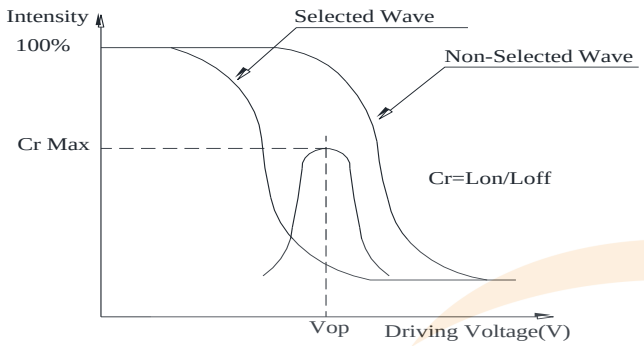

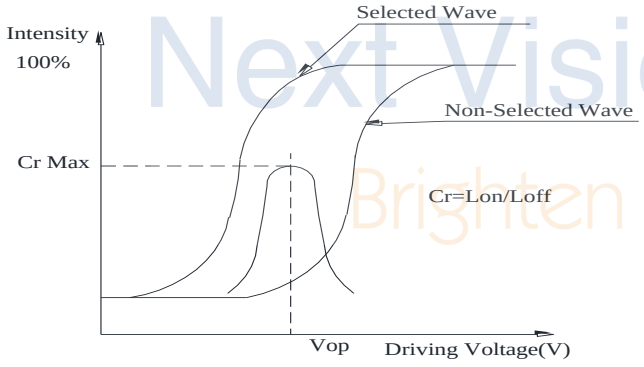

Definition of Response Time (Tr , Tf)

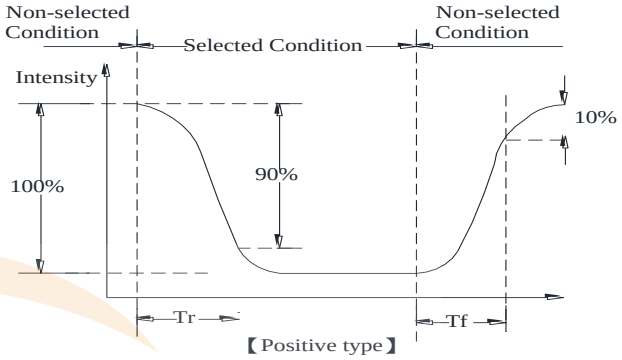

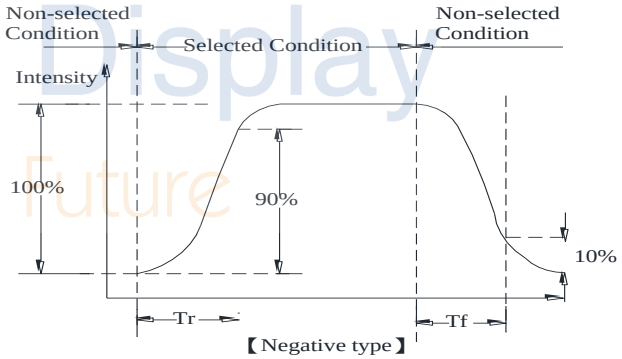

Next Vision Display
Brighten The Future

Conditions :

Operating Voltage : Vop　　Viewing Angle(θ ， φ) : 0°， 0°

Frame Frequency : 64 HZ　　Driving Waveform : 1/N duty , 1/a bias

Definition of viewing angle(CR≧2)

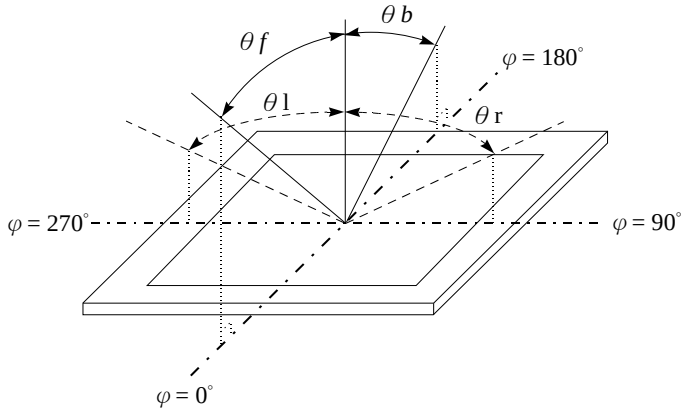

Interface Pin Function

<table>
<tr><th>Pin No.</th><th>Symbol</th><th>Level</th><th>Description</th></tr>
<tr><td>1</td><td>IRS</td><td>I</td><td>This terminal selects the resistors for the V0 voltage level adjustment.
IRS = “H”: Use the internal resistors
IRS = “L”: Do not use the internal resistors. The V0 voltage level is regulated by an external resistive voltage divider attached to the VR terminal</td></tr>
<tr><td>2</td><td>/HPM</td><td>I</td><td>This is the power control terminal for the power supply circuit for liquid crystal drive.
/HPM = “H”: Normal mode
/HPM = “L”: High power mode (Default)</td></tr>
<tr><td>3</td><td>P/S</td><td>I</td><td>This is the parallel data input/serial data input switch terminal.
P/S = “H”: Parallel data input.
P/S = “L”: Serial data input.
The following applies depending on the P/S status:
<table>
<tr><th>P/S</th><th>Data/Command</th><th>Data</th><th>Read/Write</th><th>Serial Clock</th></tr>
<tr><td>“H”</td><td>A0</td><td>D0 to D7</td><td>/RD, /WR</td><td>X</td></tr>
<tr><td>“L”</td><td>A0</td><td>SI (D7)</td><td>Write only</td><td>SCL (D6)</td></tr>
</table>
When P/S = “L”, D0 to D5 fixed “H”.
/RD (E) and /WR (R/W) are fixed to either “H” or “L”.
With serial data input, It is impossible read data from RAM</td></tr>
<tr><td>4</td><td>C86</td><td>I</td><td>This is the MPU interface selection pin.
C86 = “H”: 6800 Series MPU interface.
C86 = “L”: 8080 Series MPU interface</td></tr>
<tr><td>5</td><td>VR</td><td>I</td><td>Output voltage regulator terminal. Provides the voltage between VSS and V0 through a resistive voltage divider.
IRS = “L” : the V0 voltage regulator internal resistors are not used.
IRS = “H” : the V0 voltage regulator internal resistors are used.</td></tr>
<tr><td>6~10</td><td>V0~V4</td><td>Power Supply</td><td>This is a multi-level power supply for the liquid crystal drive.</td></tr>
<tr><td>11</td><td>VRS</td><td>Power Supply</td><td>This is the internal-output VREG power supply for the LCD power supply voltage regulator.</td></tr>
<tr><td>12</td><td>CAP4+</td><td>O</td><td>DC/DC voltage converter.</td></tr>
<tr><td>13</td><td>CAP2-</td><td>O</td><td>DC/DC voltage converter. Connect a capacitor between this terminal and the CAP2P terminal.</td></tr>
</table>

Next Vision Display
Brighten The Future

14	CAP2+	O	DC/DC voltage converter. Connect a capacitor between this terminal and the CAP2N terminal.
15	CAP1+	O	DC/DC voltage converter. Connect a capacitor between this terminal and the CAP1N terminal.
16	CAP1-	O	DC/DC voltage converter. Connect a capacitor between this terminal and the CAP1P terminal.
17	CAP3+	O	DC/DC voltage converter. Connect a capacitor between this terminal and the CAP1N terminal.
18	CAP5+	O	DC/DC voltage converter.
19	VOUT	O	DC/DC voltage converter. Connect a capacitor between this terminal and vss or VDD
20	VSS	Power Supply	Ground
21	VDD	Power Supply	Power supply
22~29	D7~D0	I/O	Data bus line
30	/RD(E)	I	• When connected to 8080 series MPU, this pin is treated as the "/RD" signal of the 8080 MPU and is LOW-active. The data bus is in an output status when this signal is "L". • When connected to 6800 series MPU, this pin is treated as the "E" signal of the 6800 MPU and is HIGH-active. This is the enable clock input terminal of the 6800 Series MPU.
31	/WR(R/W)	I	• When connected to 8080 series MPU, this pin is treated as the "/WR" signal of the 8080 MPU and is LOW-active. The signals on the data bus are latched at the rising edge of the /WR signal. • When connected to 6800 series MPU, this pin is treated as the "R/W" signal of the 6800 MPU and decides the access type : When R/W = "H": Read. When R/W = "L": Write.
32	A0	I	This is connect to the least significant bit of the normal MPU address bus, and it determines whether the data bits are data or command. A0 = "H": Indicates that D0 to D7 are display data. A0 = "L": Indicates that D0 to D7 are control data.
33	/RES	I	When RES is set to "L", the setting are initialized.
34	/CS1	I	This is the chip select signal.

Next Vision Display
Brighten The Future

Contour Drawing

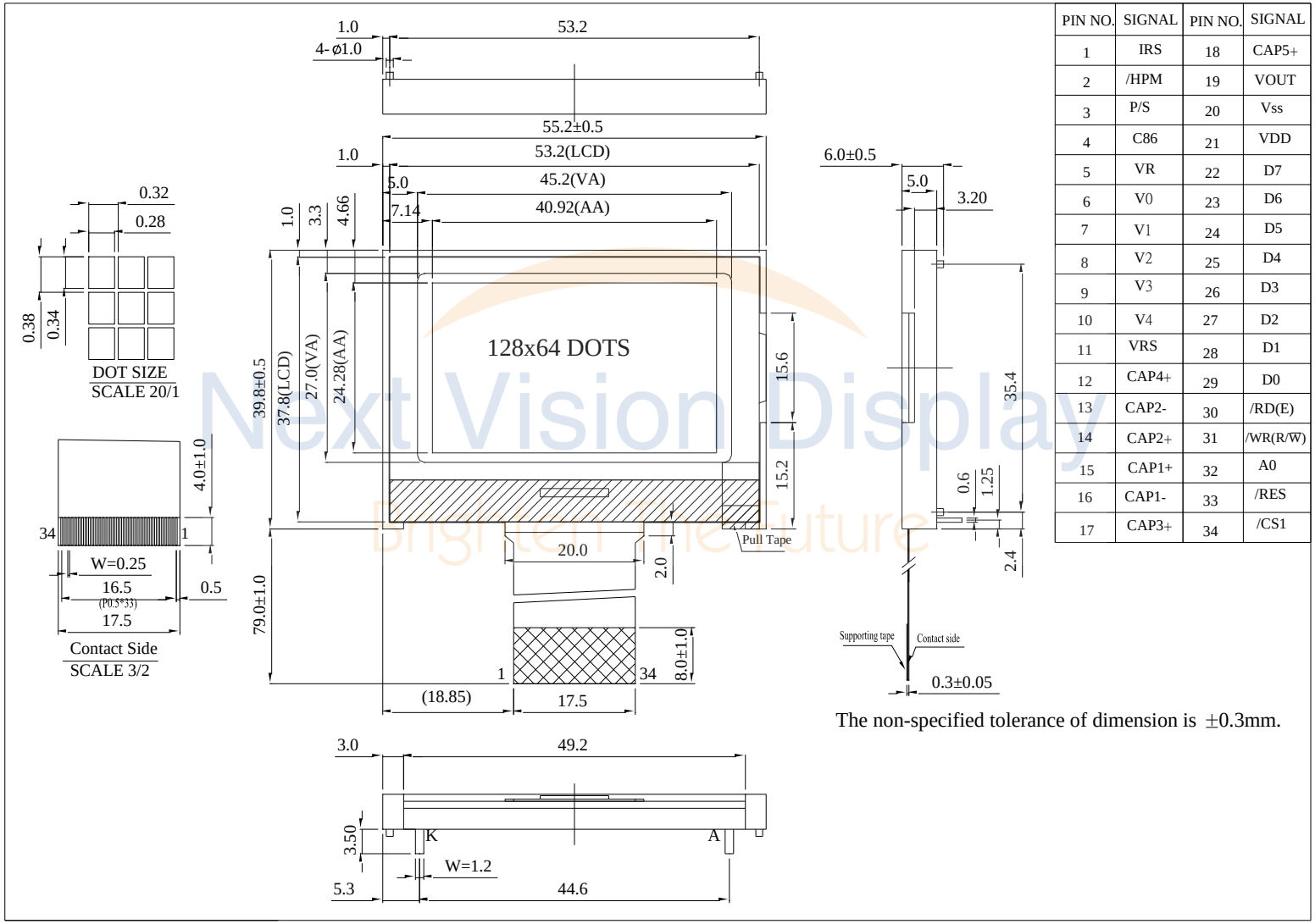

PIN NO.	SIGNAL	PIN NO.	SIGNAL
1	IRS	18	CAP5+
2	/HPM	19	VOUT
3	P/S	20	Vss
4	C86	21	VDD
5	VR	22	D7
6	V0	23	D6
7	V1	24	D5
8	V2	25	D4
9	V3	26	D3
10	V4	27	D2
11	VRS	28	D1
12	CAP4+	29	D0
13	CAP2-	30	/RD(E)
14	CAP2+	31	/WR(R/W)
15	CAP1+	32	A0
16	CAP1-	33	/RES
17	CAP3+	34	/CS1

The non-specified tolerance of dimension is ±0.3mm.

Next Vision Display
Brighten the Future

Reliability

Content of Reliability Test (Wide temperature, -20℃~70℃)

Environmental Test			
Test Item	**Content of Test**	**Test Condition**	**Note**
High Temperature storage	Endurance test applying the high storage temperature for a long time.	80℃ 200hrs	2
Low Temperature storage	Endurance test applying the low storage temperature for a long time.	-30℃ 200hrs	1,2
High Temperature Operation	Endurance test applying the electric stress (Voltage & Current) and the thermal stress to the element for a long time.	70℃ 200hrs	— —
Low Temperature Operation	Endurance test applying the electric stress under low temperature for a long time.	-20℃ 200hrs	1
High Temperature/ Humidity storage	The module should be allowed to stand at 60℃,90%RH max For 96hrs under no-load condition excluding the polarizer, Then taking it out and drying it at normal temperature.	60℃,90%RH 96hrs	1,2
Thermal shock resistance	The sample should be allowed stand the following 10 cycles of operation -20℃ 25℃ 70℃  30min 5min 30min 1 cycle	-20℃/70℃ 10 cycles	— —
Vibration test	Endurance test applying the vibration during transportation and using.	Total fixed amplitude : 1.5mm Vibration Frequency : 10~55Hz One cycle 60 seconds to 3 directions of X,Y,Z for Each 15 minutes	3
Static electricity test	Endurance test applying the electric stress to the terminal.	VS=±600V(contact), ±800v(air), RS=330Ω CS=150pF 10 times	— —

Note1: No dew condensation to be observed.

Note2: The function test shall be conducted after 4 hours storage at the normal Temperature and humidity after remove from the test chamber.

Note3: The packing have to including into the vibration testing.

Next Vision Display
Brighten The Future

Backlight Information

Specification

PARAMETER	SYMBOL	MIN	TYP	MAX	UNIT	TEST CONDITION
Supply Current	ILED	36	48	60	mA	V=3.5V
Supply Voltage	V	3.4	3.5	3.6	V	
Reverse Voltage	VR	—	—	5	V	—
Luminance (Without LCD)	IV	800	1000	—	CD/M^2	ILED=48mA
LED Life Time (For Reference only)	—	—	50000	—	Hr.	I_{LED}≦48mA 25℃,50-60%RH, (Note 1)
Color	White					

Next Vision Display
Brighten The Future

Note: The LED of B/L is drive by current only；driving voltage is only for reference
To make driving current in safety area (waste current between minimum and maximum).

Note 1:50K hours is only an estimate for reference.

LED B\L Drive Method
1.Drive from A , K

